# ADJUSTABLE ROLLER CAM

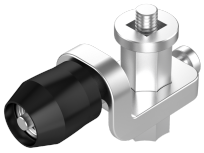

Adjustable roller cam that can be assembled on all quarter-turn latches for combi cut-out including L-handles, T-handles and knobs. Available both for latches requiring cam with projection and for latches requiring cams without projection. Provides 48 mm adjustability and between 4 – 52 mm for latches with 18 mm housing depth. Cam is secured at chosen grip range with a set-screw.

Both set-screw and screw to attach the adjustable roller cam to the latch are supplied as Phillips head screws.

**MATERIAL**
**Cam:** Zinc die cast, zinc plated
**Roller:** Glass fibre reinforced polyamide (PA6GF30)
**Screw:** Steel, zinc plated

**RELATED PRODUCTS**
**Similar products:** 2-485
Use the Index Code at industrilas.com

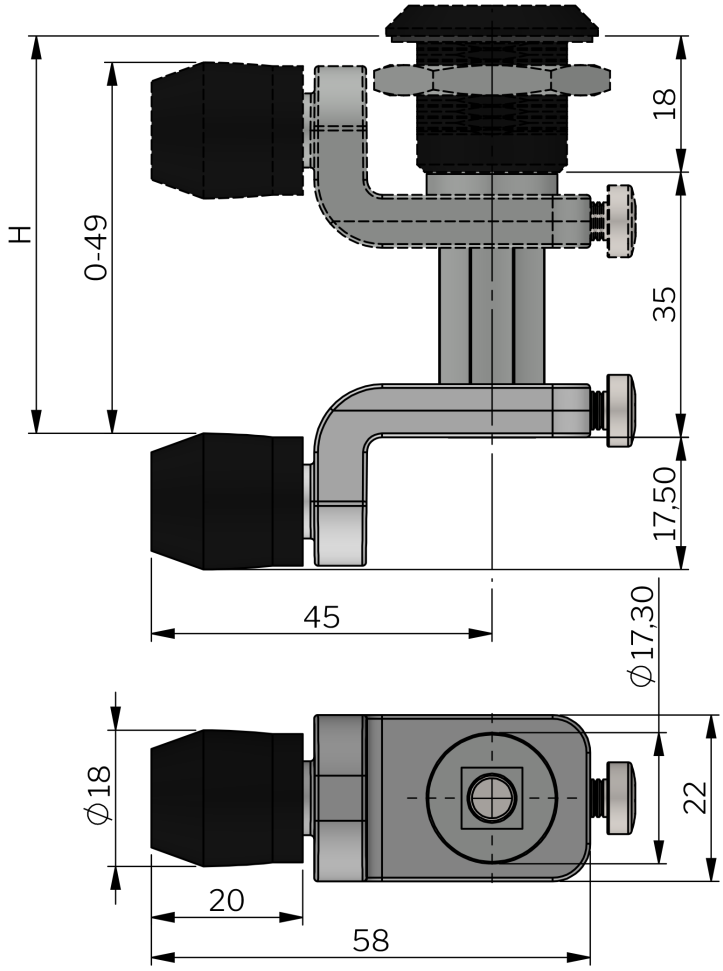


| P/N | Description |
|---|---|
| 2323-0100-214545 | For Vibration Resistant - without projection |
| 2323-0101-214545 | For Classic - with projection |

Industrilås
When access counts

**Grip Range**

| 12 mm housing | | 18 mm housing | | 30 mm housing | | 45 mm housing | | 56 mm housing | |
|---|---|---|---|---|---|---|---|---|---|
| H min | H max | H min | H max | H min | H max | H min | H max | H min | H max |
| 0.0 | 46.5 | 4.0 | 52.5 | 16.0 | 64.5 | 31.0 | 79.5 | 42.0 | 90.5 |